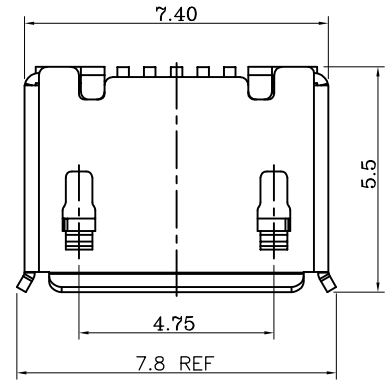

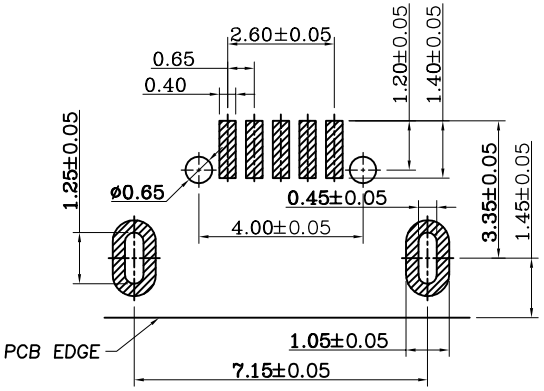

RECOMMENDED PCB LAYOUT (TOL:±0.05)

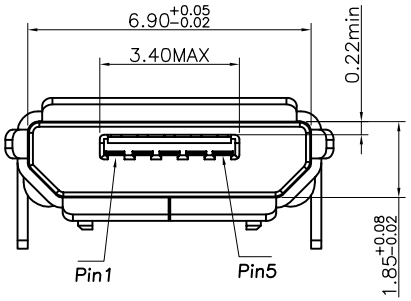

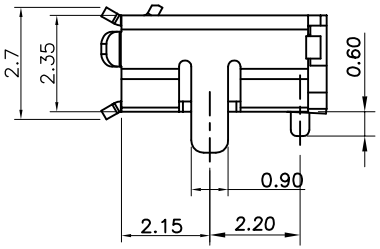

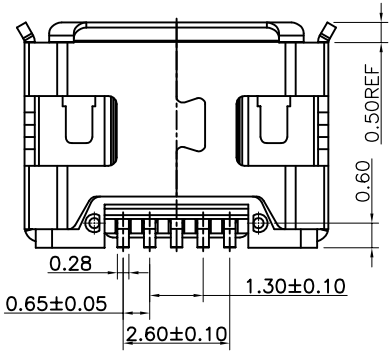

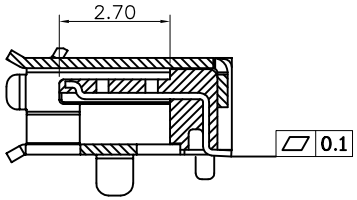

ORDERING INFORMATION

U 6 F 05 E – C X T 1 – B
(1)(2)(3) (4) (5) (6)(7)(8)(9) (10)

1. SERIES NO.
   U: USB CONNECTOR SERIES
2. USB TYPE
   6: MICRO.USB 5Pin
3. USB MALE & FEMALE TYPE
   F: FEMALE
4. NUMBER OF PIN
   05: 5 POSITIONS
5. TAIL CONSTRUCTION TYPE
   E: TERMINAL: SMD TYPE
   SHELL: DIP TYPE
6. HOUSING COLOR
   C:COLOR:BLACK AND MATERIAL :LCP
7. CONTACT PLATING
   1: G/F 2: 5u'GOLD
   3: 10u'GOLD 4: 15u'GOLD
   5: 30u'GOLD 6: 3u'GOLD
8. SHELL PLATING
   N: NICKEL PLATING
   T: TIN PLATING
   G: Gold Plated
9. PLASTIC ORIENTATION POST TYPE
   1: WITH POST
   2: WITHOUT POST
10. B TYPE OR AB TYPE
   B: B TYPE

ELECTRICAL

1 Current rating: signal(pins 2,3,4): 1.0A;
power(pins 1,5): 1.8A
2 Contact resistance:30 milliohms max
3 Insulation resistance:1000 Megohms min
4 Withstanding voltage:100V AC/minute
5 Temperature range:−30°C to +85°C

NO.	DATE	DESCRIPTION	APPROVAL
5.0			
4.0			
3.0			
2.0			
1.0			

DRAWING: Bains
CHECKED: Tian hai
APPROVAL: Tian hai

GENERAL TOLERANCE
.X:=±0.30 .X°:=±2°
.XX:=±0.20 .XX°:=±1°
.XXX:=±0.10 .XXX°:=±0.5°

UNIT: MM
PROJECTION:
SCALE: 1/1
SHEET: 1/1

CHIN-BAN electronics (H.K) co., ltd

DESCRIPTION: MICRO USB 5PIN B TYPE
PART NO: U6F05E−CXT1−B
REV: 3.0
DRAWING NO: UK0173
SIZE: A4