ROHS+REACH

NO.	DATE	DESCRIPTION	APPROVAL
X0	2017.06.26	NEW PRODUCT	LI HUI

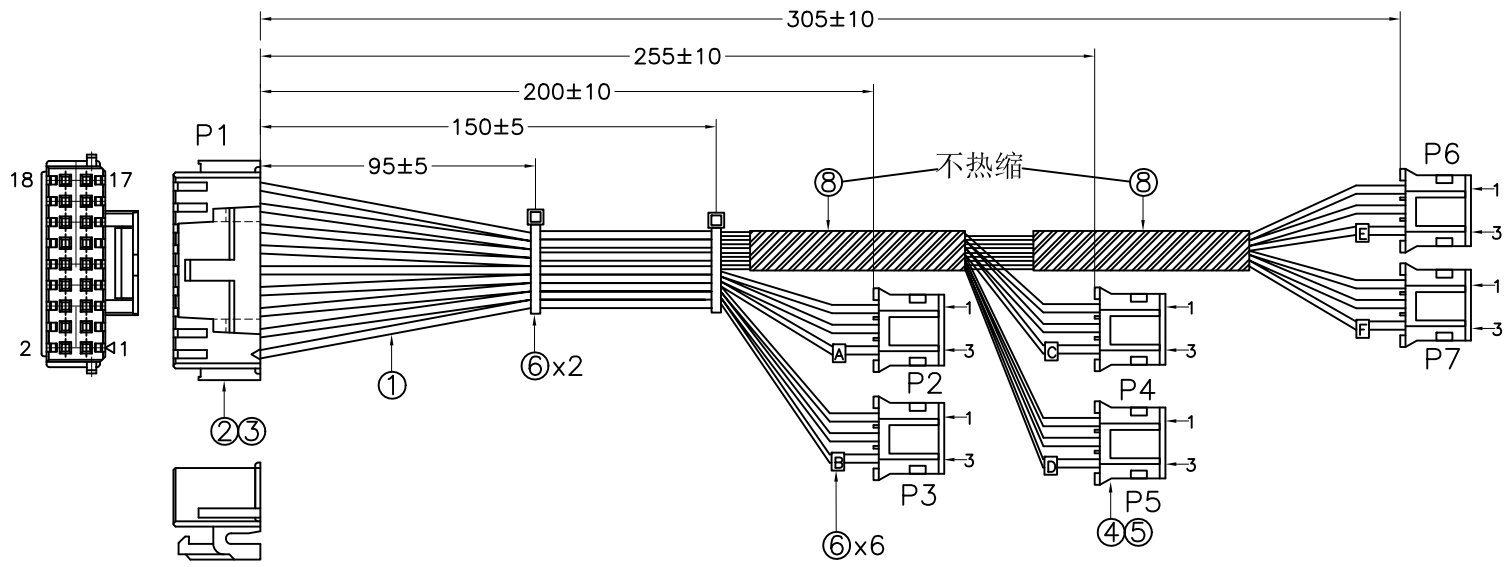

WIRE DEFINITION

P1	COLOR	P2	P3	P4	P5	P6	P7
1	RED	1					
7	BLAKC	2					
13	WHITE	3					
2	RED		1				
8	BLAKC		2				
14	WHITE		3				
3	RED			1			
9	BLAKC			2			
15	WHITE			3			
4	RED				1		
10	BLAKC				2		
16	WHITE				3		
5	RED					1	
11	BLAKC					2	
17	WHITE					3	
6	RED						1
12	BLAKC						2
18	WHITE						3

NOTES:
1. 100% CONTINUNY TEST ANY OPEN OR MIS WIRE, SHORT OR INTERMITENCE ARE NOT PERMITTED
2. INSULATION RESISTANCE:20M OHMS MIN
3. CONDUCTOR RESISTANCE:1Ω MAX

ITEM	TITLE	SPECIFICATION	Q'TY	CHIN-BAN P/N
⑧	TUBE	BLACK HEAT SHRINK TUBE: ø7.0*55mm 125° 300V	2PCS	
⑦	LABEL	LABEL STYLE:12*30mm PRINTING CONTENT AS SHOWN ABOVE	6PCS	
⑥	TIES	CABLE TIES W:2mm*L=100MM WHITE NYLON BUCKLES	2PCS	
⑤	TERMINAL	CRIMP TERMINAL MALTERIALS: PHOSPHOR BRONZE TIN-PLATED	18PCS	
④	HOUSING	SINGLE ROW SOCKET PITCH:2.0mm-3PIN WHITE	6PCS	
③	TERMINAL	CRIMP TERMINAL MALTERIALS: PHOSPHOR BRONZE TIN-PLATED	18PCS	
②	HOUSING	DOUBLE ROW SERIES PITCH:2.0mm*2*9PIN WHITE	1PCS	
①	WIRE	UL1007 24AWG 80°C 300V INSULATION:PVC OD:1.4mm COLOR AS SHOWN ABOVE	18PCS	

DRAWING: li hui 2017.06.26

CHECKED: Ricky 2017.06.26

APPROVAL: Cykin 2017.06.26

TOLERANCE
.X:=±0.50
.XX:=±0.30
.XXX:=±0.10
.X°:=±2°

UNIT: mm

SCALE:N/A

SHEET:1/1

CHIN-BAN
electronics (H.K) co., ltd

DESCRIPTION: PITCH:2.0-2*9P TO PITCH:2.0-3P

CUSTOMER:

CUSTOMER P/N:

DRAWING NO: A-HSHS-1403-N150

REV: X0

DEF. UK

SIZE: A4